High stability trimmers for consumer or professional use, vertical or horizontal on PCB mounting.

Rated voltage (d.c.)	250 V
Test voltage (d.c.) for 1 minute	500 V
Category temperature range	−40 to +70 °C
Temperature coefficient	see table
Insulation resistance	> 10 000 MΩ
Contact resistance	< 10 mΩ
Tan δ	see table
Climatic category IEC 68	40/070/21
Angle of rotation	180°

High stability trimmers for consumer or professional use, vertical or horizontal on PCB mounting.

Rated voltage (d.c.)	250 V
Test voltage (d.c.) for 1 minute	500 V
Category temperature range	−40 to +70 °C
Temperature coefficient	see table
Insulation resistance	> 10 000 MΩ
Contact resistance	< 10 mΩ
Tan δ	see table
Climatic category IEC 68	40/070/21
Angle of rotation	180°

Adjustments (see tables opposite)

	top	bottom
a	screwdriver	key (detail Z)
b	hexagonal head	key (detail Z)
c	screwdriver	screwdriver
d	hexagonal head	screwdriver

Adjustment tools available

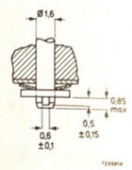

detail Z, turned 90°
see drawings opposite
not for 41121; 44121
71121; 74121

reference to current ranges pF	guaranteed max C_{min}/min C_{max} pF	max tan δ at C_{max} and at 1 MHz	100 MHz	temperature coefficient ppm/ °C	base colour	last five digits of catalogue no vertical mounting	horizontal mounting
1,2/6	1,4/5,5	10×10^{-4}	25×10^{-4}	−400 ± 300	grey	11558	–
1,4/10	2 /10	10×10^{-4}	25×10^{-4}	−200 ± 300	yellow	11109	51109
1,6/15	2 /15	10×10^{-4}	25×10^{-4}	−200 ± 350	blue	11159	–
1,8/15	2,5/15	10×10^{-4}	25×10^{-4}	0 ± 400	blue	31159; 32159	61159
1,8/22	2 /22	10×10^{-4}	25×10^{-4}	−250 ± 350	green	11229	51229
2,5/25	3 /22,5	10×10^{-4}	25×10^{-4}	0 ± 400	green	31229; 32229	61229
2 /30	2 /27	50×10^{-4}	–	−250 ± 300	red	11279	51279
2 /40	3 /40	–	–	−250 ± 300	violet	11409	–
4 /40	5,5/40	10×10^{-4}	25×10^{-4}	−150 ± 350	grey	31409; 32409	61409
4,5/70	5,5/65	10×10^{-4}	25×10^{-4}	−200 ± 300	yellow	31659; 32659	61659; 64659
5 /90	6 /80	50×10^{-4}	–	−100 ± 300	red red	31809; 32809 34809	61809 64809
5 /105	6 /100	50×10^{-4}	–	−100 ± 300	violet	31101; 32101	64101
8 /130	11 /120	50×10^{-4}	–	0 ± 200 −200 ± 200	green green	41121; 44121 –	– 71121; 74121

Vertical mounting

catalogue no.	adj.	H max	W max	S max	h
2222 808 **11** . . .	a	10	8	5	–
31 . . .	a	11	10,6	6	–
32 . . .	a	11	10,6	6	–
34809	b	15,3	10,6	6	5,8
41121	c	11	14,1	8,2	–
44121	d	14	14,1	8,2	4,5

version with hexagonal head;
distance across flats 2,5-0,06 mm

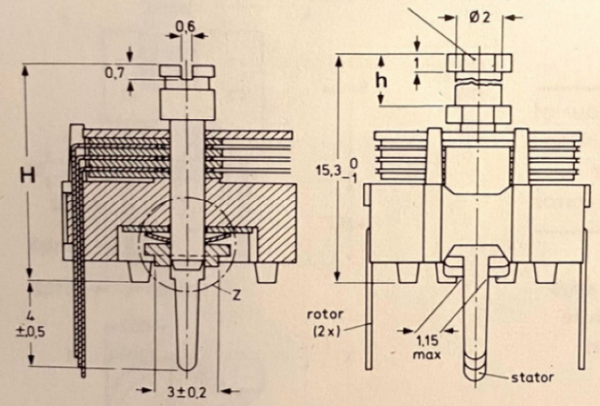

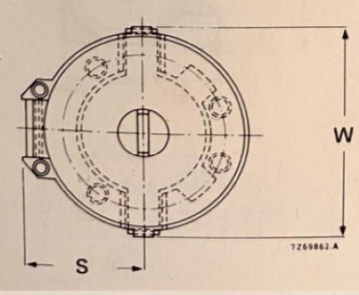

Horizontal mounting

catalogue no.	adj.	H max	W max	S max	V max	h
2222 808 **51** . . .	a	10	8	5	–	–
61 . . .	a	11	10,6	6,05	4,2	–
64 . . .	b	15,3	10,6	6,05	4,2	5,8
71121	c	11	14,1	–	5,4	–
74121	d	14	14,1	–	5,4	4,5

version with hexagonal head;
distance across flats 2,5-0,06 mm

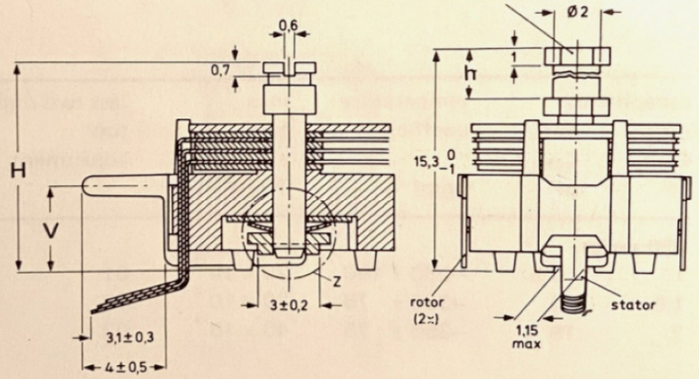

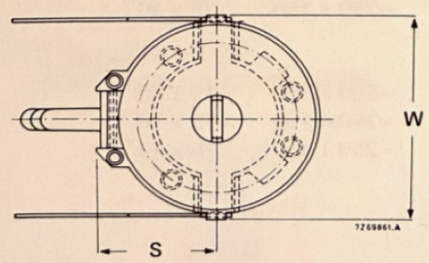

R = rotor; S = stator; large hole only for bottom adjustment

Hole patterns for 2222 808 . . . . .

11 . . .

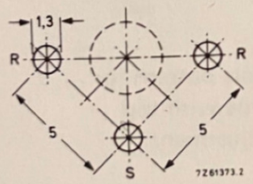

32 . . .

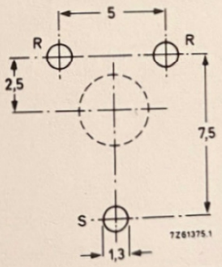

31 . . . **61** . . .
34809 **64** . . .

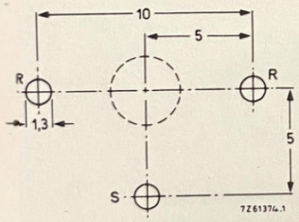
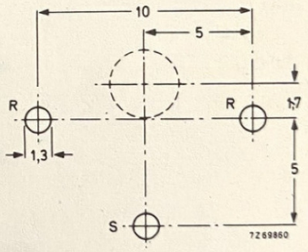
71121 **41121**
74121 **44121**