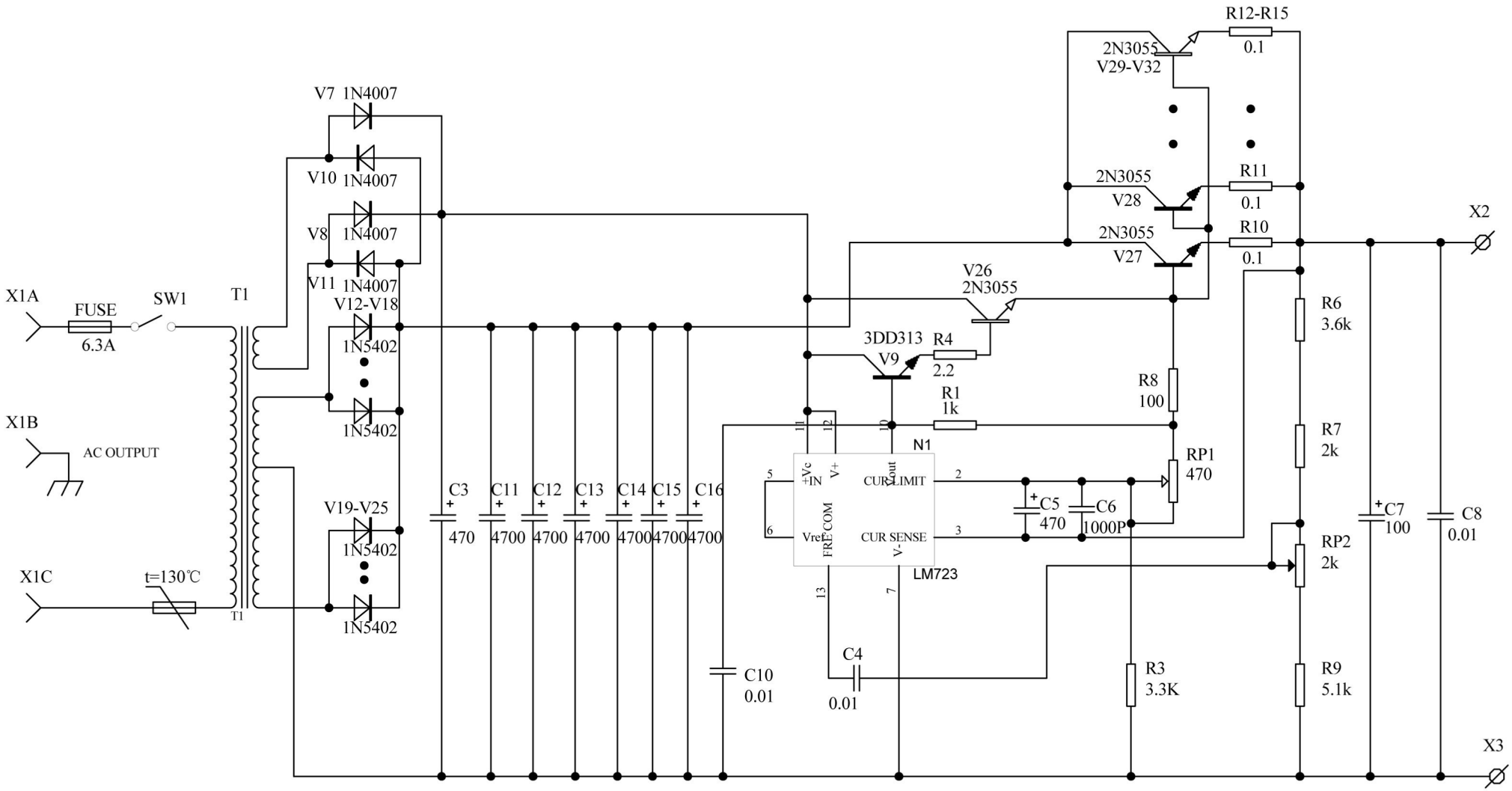
X1A
FUSE
6.3A
SW1
T1
X1B
AC OUTPUT
X1C
t=130℃
V7 1N4007
V10 1N4007
V8 1N4007
V11 1N4007
V12-V18
1N5402
V19-V25
1N5402
C3
470
C11
4700
C12
4700
C13
4700
C14
4700
C15
4700
C16
4700
C10
0.01
C4
0.01
3DD313
V9
R4
2.2
R1
1k
V26
2N3055
N1
LM723
+Vc
IN
V+
Vout
CUR LIMIT
Vref
FREQ COM
CUR SENSE
V-
C5
470
C6
1000P
R8
100
RP1
470
R3
3.3K
2N3055
V29-V32
R12-R15
0.1
2N3055
V28
R11
0.1
2N3055
V27
R10
0.1
R6
3.6k
R7
2k
RP2
2k
R9
5.1k
C7
100
C8
0.01
X2
X3

PS1330